STEADLEAF PRESS
GROW / MAKE / MEND

MAKE / M05 - USEFUL SEWN OBJECTS

Sew a Small Fabric Pouch

One rectangle. Two hems. Two hand-sewn sides.
An original beginner pattern you can measure and print.



ORIGINAL ONE-PIECE PATTERN

160 x 240 mm cut | about 140 x 105 mm finished

FREE PRACTICAL GUIDE

Includes a full-size pattern and a print-scale check.

Illustration and calculated sizes: editorial only; no physical sewing trial.

A one-piece, open-top pocket with a measurable cutting pattern and a first hand-sewn seam.

The project you can actually finish

A small fabric pouch can start with a single rectangle. Instead of adding a zip, lining, gusset, drawstring or separate bottom seam, this design folds the fabric at the base, stitches two sides, and hems the opening. It is meant for lightweight, dry, non-sharp keepsakes such as spare buttons in a closed container, paper notes or a soft fabric swatch. It is not a secure bag, a protective case, a child's toy, or packaging for food, medication, hot items or valuables. **Keep it and any small stored objects, including buttons, out of reach of children under three.** An open pouch can spill small objects that pose a choking hazard.

Your finished object: an open-top cotton pouch with an approximately 14 cm-wide opening and 10.5 cm usable depth, assuming accurate cutting, even folds and 10 mm side seams. This is a calculated size, not a physically measured sample. A sample made with a different fabric or stitching technique may finish with different dimensions.

Your practical result: one cut-and-fold rectangle, two neat opening hems, two secure side seams, finished raw allowances and a short record of the actual measurements. A slightly uneven sample can be more instructive than an untested claim of perfection.

1. Make the material decision first

Choose a stable, medium-weight woven cotton for your first attempt: a clean, prewashed and pressed offcut is suitable if it is at least 16 by 24 cm and has no thin or damaged patches. Plain weave is easier to mark than a slippery satin, stretchy knit, dense upholstery fabric or thick multi-layer material. A patterned scrap is fine; make sure the motif still looks intentional when the fabric folds. Do not use a chemically contaminated or unknown treated scrap for an item that will be handled regularly.

You will need fabric scissors, a small ruler or measuring tape, removable fabric chalk, a hand-sewing needle that suits the fabric and thread, all-purpose sewing thread, a pincushion or closed needle holder, clips or pins, and a blunt point-turning tool such as a capped pen. A seam ripper and an iron with a protected pressing surface are helpful, not prerequisites if accurate finger pressing is possible. Follow the iron and fabric manufacturer's guidance. **Safety:** Account for all pins and needles before and after work. Do not leave sharp tools unattended on floors, furniture, or surfaces accessible to children or pets.

Needle selection and cutting tools are not one-size-fits-all. Utah State University Extension's basic sewing supplies guide describes beginner tools including fabric shears, measuring tools, a sewing supply container, hand needles and marking tools. Choose only what your project needs; this pouch does not require a rotary cutter, a machine, interfacing or a zipper. [1]

2. Read the dimensions without guessing

For the one-piece demonstration, cut a rectangle **160 mm wide by 240 mm long** (16 by 24 cm). The long direction folds in half so that there is no bottom seam. Mark the midpoint at **120 mm** from either short end. On each short edge, mark two lines **5 mm and 15 mm** inwards: turn the first 5 mm and then turn another 10 mm to enclose the raw edge. In total, each opening hem consumes **15 mm** of that end's length. After folding the long rectangle at its midpoint, those two hemmed ends meet at the open mouth of the pouch.

Mark the two side seam lines **10 mm** in from the long raw edges once the piece is folded. Sew only those sides; the folded bottom stays intact. With ordinary woven fabric and careful work, the estimated flat finished width is **160 − 10 − 10 = 140 mm**. The estimated usable depth is **240 ÷ 2 − 15 = 105 mm**. Both short ends are hemmed separately before folding. Once folded, each side extends 120 mm from the bottom fold to the original short edge; its own 15 mm top hem reduces its finished depth to 105 mm. The two hems meet at one open mouth—do not subtract 30 mm from each side. Those figures describe a flat pouch, not a load capacity or interior volume. The stitch thickness, corner turning and fabric behaviour may change the actual result.

The separate pattern PDF has a full-size 160 × 240 mm rectangle for A4 and US Letter, a 50 mm check bar, fold line, hem fold marks and stitch guides. **Print at "Actual size" or 100%**, with fit-to-page and auto-scaling switched off, then measure the 50 mm bar. If it does not measure 50 mm, do not cut from that printout. Mark the measurements on fabric with a ruler instead. A computer-screen view or printer preview is not a physical measurement.

If you want a different pouch later, choose a finished target width W and depth D. For this same construction and allowances, cut **W + 20 mm wide** and **2 × (D + 15 mm) long**. For example, a target flat width of 180 mm and depth of 130 mm requires a 200 × 290 mm rectangle. This is a geometry formula only. It does not mean the larger pouch is suitable for heavier contents or that its pattern will fit on one sheet of paper.

3. Lay out and cut the single piece

ORIGINAL MEASURED CUT PLAN | NOT TO SCALE

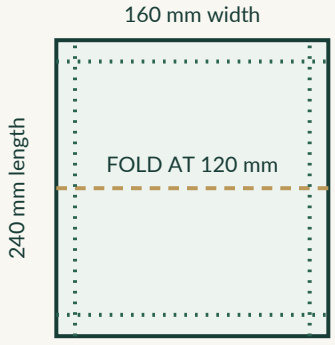

CUT 1 RECTANGLE 160 x 240 mm

1. **Hem both short edges**
   5 mm, then 10 mm (15 mm total).
2. **Fold at the midpoint**
   Right sides together; bottom is a fold.
3. **Stitch both long sides**
   10 mm in from each raw side edge.
4. **Turn, finish, measure**
   About 140 x 105 mm flat size.

Inspect the fabric on a flat surface. Establish which face should appear outside (the **right side**) and which will be hidden inside (the **wrong side**). If there is a print direction, check it at both halves: when you fold a single piece at the bottom, one half of a directional motif may face upside-down. If that matters, use nondirectional fabric for this first pouch or choose a different two-panel design; do not promise the original pattern solves directional prints.

Place the 160 × 240 mm template on the fabric or measure the dimensions directly. Check the width and length twice. Mark the outer cut rectangle without adding extra seam allowance; the 10 mm side seams and 15 mm mouth hems are already included in the cut dimensions. Cut slowly with the fabric supported; keep fingers away from the scissor path. Measure the resulting piece, noting if a corner is no longer square.

Draw a light midpoint line across the width 120 mm from either end. Make short, removable marks 5 and 15 mm from both top and bottom short edges on the wrong side. Do not cut along the fold or hem lines. The pattern's solid perimeter is the only cut line. Its dashed and dotted lines are guides for folding and sewing, not slits.

4. Hem the two ends before closing the sides

Lay the rectangle wrong side up. At one 160 mm short end, fold 5 mm towards the wrong side, then fold another 10 mm so the first raw edge is hidden inside. Finger-crease or press cautiously. Repeat at the opposite short end. Keep the hems approximately equal, and look at the edges from the wrong side to check that no frayed cut edge is exposed.

Sew near the inner folded edge of each hem with small, reasonably regular running stitches, stopping and securing your thread at the ends. Take care not to sew the two halves together; the rectangle is still open and flat. This step is easier before the pouch is folded. If you have difficulty holding a 5 mm first turn, practise on another scrap, use compatible clips, or increase the starting fabric size and recalculate your finished measurement; do not claim a crooked hem is a precise 15 mm hem.

For hand stitching, keep thread lengths manageable to limit tangling. Avoid tightening stitches until the fabric puckers. Press the sewn hems gently if the fibre and tools permit it. A neat hem makes the mouth edge more comfortable to handle but is not a safety or load rating.

5. Fold the bottom and stitch the sides

Fold the rectangle at its 120 mm midpoint with the **right sides together**, so you are looking at the wrong side. The two hemmed ends now form one open mouth. Align the top corners and both long raw edges. Pin or clip the sides without leaving a sharp pin where your hand will grasp the project. Do not add a third seam across the bottom fold.

Mark each side seam 10 mm inward from the raw side edge. Starting at the hemmed top, backstitch or make several small reinforcing stitches, then stitch down the side towards the folded bottom. Use a short, consistent backstitch where possible; a running stitch may be used for a light practice sample if you reinforce the seam and accept its limitations. Finish with securing stitches at the bottom. Repeat the second side. Do not pull the stitches so tightly that the edges curl. Utah State University Extension’s published sewing examples use measured seam allowances, pressed seams and secured stitching; those are general construction principles, not a tested approval of this original pattern. [2]

Before turning the work, gently separate the two layers at the mouth to confirm you did **not sew it shut**. Look along both seams for missing sections or loops that have caught only one layer. If a side seam wanders inward by several millimetres, your finished width will be smaller than the calculated 140 mm; record this instead of labelling the original dimensions as measured results.

6. Protect the raw side allowances

For this unlined pouch, two raw long edges remain inside each side seam. They may fray with handling or washing. On the wrong-side-out pouch, work small overcast stitches along the exposed raw seam allowances, taking care not to pierce through the finished outside layer. You can finish the two allowances separately or as a neatly controlled pair if the fabric is light enough; the aim is to reduce loose threads without making a bulky ridge. Keep at least the original 10 mm seam allowance and do not trim close to the structural line of stitching.

Check that the opening hem and side seam remain distinct. If the mouth corners are bulky, ease the folds with your fingers; avoid heavy cutting into the reinforced seam. This guide does not give a universal washing guarantee or advise heat-sealing synthetic threads. If the fabric frays aggressively even after a small test, choose a more stable material or seek an appropriate seam finish before using the pouch.

7. Turn, settle, and check the result

Remove all pins or clips. Turn the pouch right side out through its open top. Use a finger or blunt capped tool to ease out the two bottom corners. A sharp scissor tip is not a suitable turning tool: it can puncture the fabric or injure your hand. Smooth the side seams and bottom fold. If the fabric allows, press on a suitable heat-safe surface using the fibre's recommended setting.

Measure the flat opening width, the depth from top hem to bottom fold, and the symmetry of both side seams. Compare those observations with the **calculated** 140 × 105 mm target and write down the actual measurements rather than reporting the target as a result. The folded bottom should be continuous. The inside should have no loose pins, trailing thread tails or obvious torn corners.

Test only a lightweight, dry item you already intend to keep in an open-top pocket. Gently remove it and inspect the stitching. Do not deliberately stress the seams with weights, swing the pouch by its top, or use it to carry sharp tools. An open top does not prevent accidental loss, and the two hand-sewn sides have not been lab-tested for strength.

8. Troubleshooting without hiding mistakes

The mouth is narrower than expected. Recheck the cut width and whether the side seam lines were sewn 10 mm rather than farther inward. Do not cut the pouch to "fix" the finished width; that may remove necessary seam allowance.

The pouch is too shallow. Check whether the starting length was 240 mm, whether the midpoint was at 120 mm and whether both hems used 15 mm. A deep accidental hem reduces useful depth. Compare with the cut-plan arithmetic before reworking.

The sides look twisted or diagonal. The fabric may have been cut off-grain, or the two edges shifted during stitching. Turn it wrong side out, remove the affected seam carefully with a seam ripper, align and resew. Avoid tugging the seam into shape by force.

The opening edge frays. Confirm the 5 mm first turn actually enclosed the raw edge before the 10 mm second turn; repair the hem instead of cutting the edge shorter. If the weave continues to unravel, use a more stable cloth for the next sample.

A seam starts to gap. Stop using the pouch. Inspect stitch length, secured thread ends and whether both layers were captured. Restitch with suitable thread and backstitch; do not treat a loose hand-sewn sample as a secure carrying bag.

The fabric puckers. Loosen or remove over-tight stitches rather than steaming an unknown fibre aggressively. Try an even smaller sample to learn a comfortable thread tension.

9. An honest first-project record

Fictional example, not a tested sample: Maya has a small checked cotton offcut. She chooses the 160 × 240 mm layout but notices the check pattern is not square to the cut edge. Rather than copying the printed grid by eye, she measures the rectangle with a ruler and marks the midpoint. She completes the hems, catches a fold in the first side seam, and removes that seam before turning the pouch. The record ends with "seam corrected; actual finished dimensions not yet measured." It does not claim her work passed a strength test.

Record the material, cut size, hem allowances, seam line distance, actual finished opening and depth, one technique you corrected, and a suitable next practice goal. Photograph the pouch against a ruler if you want to compare later samples. Keep the first project within its job: a small, unlined, open-top pouch. A drawstring, zip, lining, waterproof treatment or protective glasses case is a different pattern with different fitting and safety checks.

Printable completion card

Project and date: _____

Fabric type and right side identified: _____

Cut rectangle measured: _____ mm wide × _____ mm long

Two end hems actually turned: _____ mm and _____ mm

Side seam lines: _____ mm from each long edge

Needles/pins all accounted for? Yes / No

Seam allowances finished against fraying? Yes / No

Finished flat width: _____ mm; finished usable depth: _____ mm

One visible error corrected / left unresolved: _____

Lightweight test item and outcome (if checked): _____

Next project decision: _____

Sources and boundaries

[1] Utah State University Extension, **Basic Sewing Supplies**. Beginner shears, pins, marking, measuring, hand needles, storage and tool choice. https://extension.usu.edu/sewing/research/basic-sewing-supplies

[2] Utah State University Extension, **Easy Sewing Maker Projects**. Examples of fabric folds, seam allowance, pressing, turning and securing stitches; no University endorsement or evaluation of this specific pattern is claimed. https://extension.usu.edu/sewing/research/easy-sewing-maker-projects

[3] Utah State University Extension, **Patchwork Pouch**. An example of explicitly specified seam allowances, right-sides-together assembly and secured seam ends. This Steadleaf pattern is newly drawn, not copied from that pattern. https://extension.usu.edu/sewing/research/patchwork-pouch

The calculations and vector cutting pattern are original to Steadleaf Press. The numerical dimensions are design estimates, not measurements of a finished physical pouch. This beginner project is for lightweight, dry, non-sharp items only; small stored objects can be a choking hazard around young children. No strength, washing or protective-performance claim is made.

CUT ONE RECTANGLE, EXACTLY 160 x 240 mm

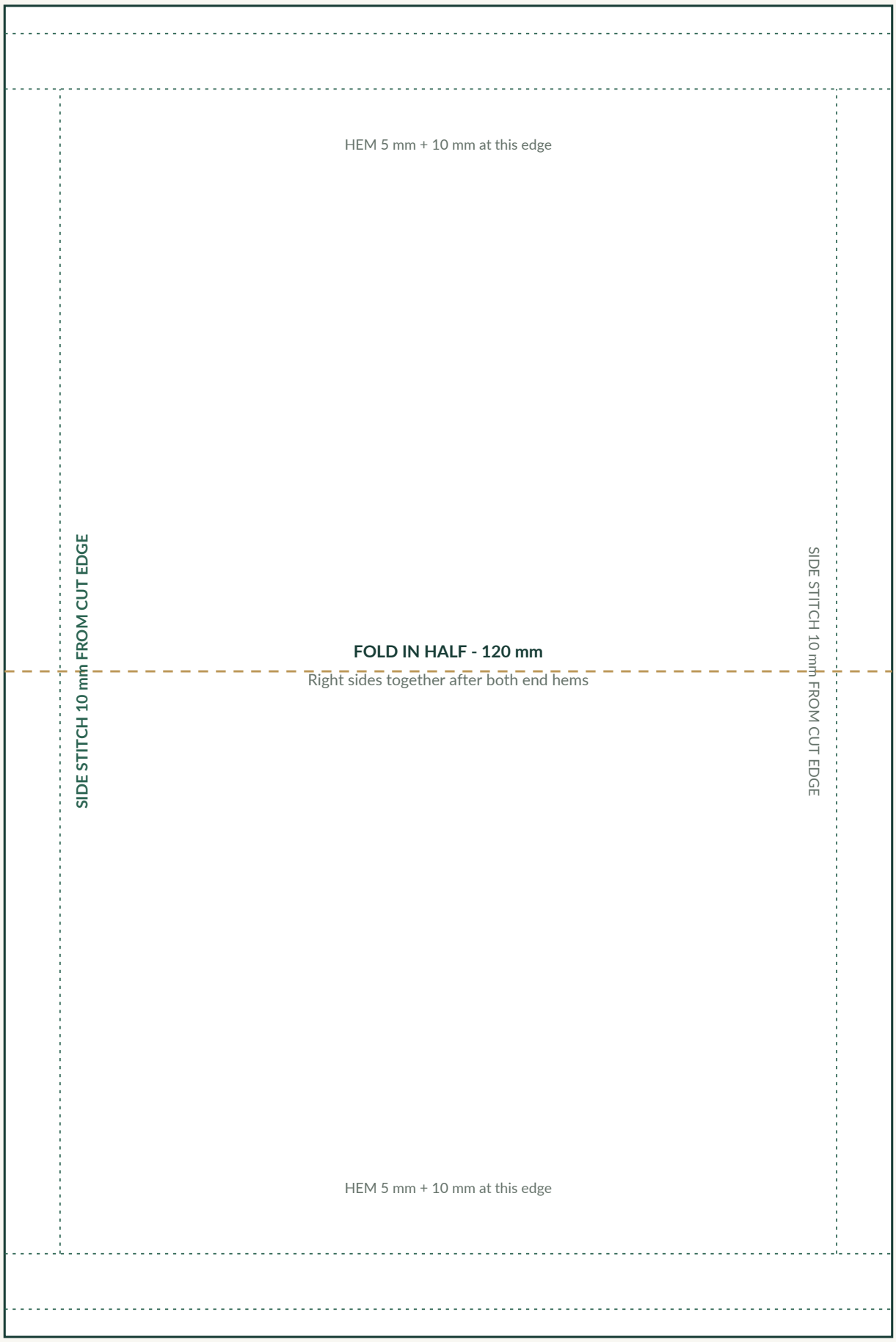

50 mm CHECK BAR - MEASURE AFTER PRINTING

Fold. Stitch. Turn. Measure.

Original unlined, open-top pouch - one piece, no drawstring or zip

Print at 100% / Actual Size, then measure the 50 mm check bar.

01 CUT

Cut 160 x 240 mm once. The cut size includes hems and seams.

02 DOUBLE-HEM

At each 160 mm end, fold 5 mm then another 10 mm to the wrong side; stitch.

03 BOTTOM FOLD

Fold at 120 mm, right sides facing. Both sewn hems meet at the mouth.

04 SIDE SEAMS

Sew 10 mm from each long raw edge; leave the top opening unsewn.

05 FINISH

Overcast the exposed inside raw edges; turn right side out and measure.

Geometric size check

Approx. flat width = 160 - 2(10) = 140 mm

Approx. useful depth = 240 / 2 - 15 = 105 mm

Calculated, not physically tested. Actual dimensions may differ.

YOUR ACTUAL WORK RECORD

Printed 50 mm bar measures: _____ mm

Fabric and cut dimensions: _____

Actual top width / useful depth: _____

Pins and needles accounted for: Yes / No

One seam or hem I would improve: _____

Pattern and illustrations are original. No physical sewing, loading, washing or fit trial.

This pouch is for lightweight, dry non-sharp keepsakes only. For lightweight, dry, non-sharp items only.