Patch a Pair of Jeans

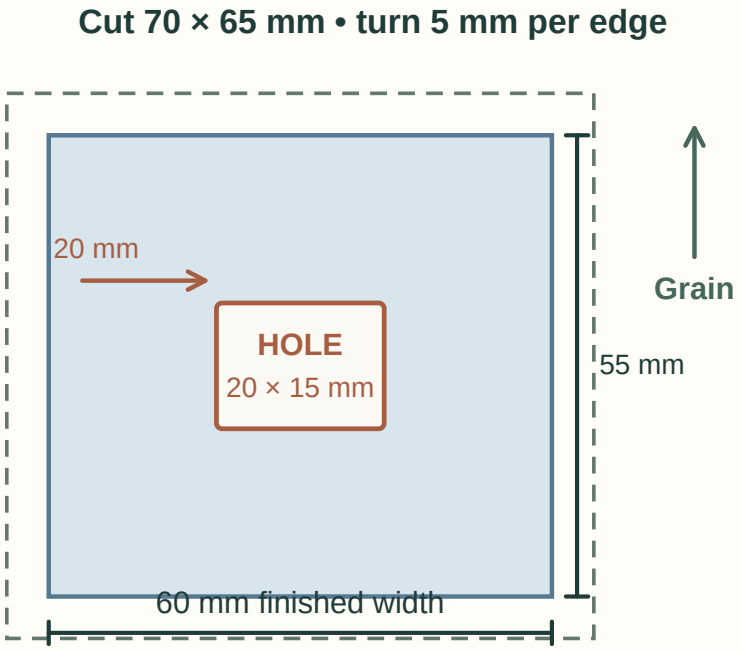

Dashed outer line: cut outline • solid: finished patch

Apply a sewn backing patch to a small damaged area of ordinary nonstretch denim.

14 practical steps • Original diagrams and repair records

Illustrative repair plans — not physical test results

Before you start

A patch works by transferring the load around a damaged area to sound cloth, not by pulling a hole shut. This example is an inside patch for ordinary adult nonstretch jeans with an accessible flat panel. It is not a repair for protective clothing, motorcycle wear, knee protection, load-bearing components, or denim that has become weak over a broad area. A heavily worn crotch, inaccessible seam or stretch denim needs a different approach.

Materials

Jeans, clean compatible woven denim or cotton twill offcut, hand-sewing needle suited to both layers, compatible thread, ruler, removable marking tool, scissors, clips or pins and a thimble if needed. Follow garment and patch care instructions. Work off the body; do not force needles through thick seams. Count all sharp tools before wearing.

Plan the repair

The worked example is a 20 x 15 mm hole surrounded by sound cloth. Use a backing patch with finished dimensions 60 x 55 mm: 20 mm beyond the example hole on every side. If turning a 5 mm edge under on all four sides, cut 70 x 65 mm. The finished patch extends beyond any additional thinning; enlarge it or refer if the whole surrounding area is weak. Align grain with the jeans. Place the patch on the reverse, right side facing the hole, with the turned edges away from the opening. Sew its perimeter into sound denim using suitable small stitches, then secure the damaged edge to the patch with small overcast stitches without tightening. The example margins are planning dimensions, not a strength specification.

Steps 1–2

1. Identify the damage

Lay the jeans flat and distinguish a hole with missing material from a small seam opening. Look for thinning, abrasion and broken threads around it. This guide assumes an accessible, ordinary woven denim panel; do not apply to safety garments.

2. Check the garment and fit

Read the fibre and care labels and compare the damaged panel to an undamaged one. If the jeans need stretch for normal movement, or are too tight at the damage, do not add a stiff woven patch. Seek a compatible repair or fit adjustment.

Steps 3–4

3. Measure the weak area

Measure the relaxed opening and any surrounding worn zone separately. Sketch both outlines. Use the larger damaged extent when planning the patch. In the example, the 20 x 15 mm hole has sound cloth immediately around it.

4. Choose compatible fabric

Select sound, already clean woven patch material with similar flexibility and compatible care. Avoid bulky old seams and fabrics that shed dye. If laundering a new patch is appropriate, follow its care directions before cutting and let it dry.

Steps 5–6

5. Calculate the patch

Add 40 mm to both dimensions of the damaged zone for the example 20 mm margin. The finished patch is 60 x 55 mm. Add another 10 mm to each dimension only for the 5 mm turned-edge option.

6. Cut and finish the patch

Mark a 70 x 65 mm rectangle on the offcut and cut it on a supported surface. Turn 5 mm toward the wrong side along each edge; fold corners neatly without bulky overlap. Baste or press only as the material allows. Check the resulting 60 x 55 mm dimensions.

Steps 7–8

7. Check needle and thread

Practise on comparable layered scraps. The needle should enter without force, and stitches should not enlarge holes or cut yarns. Choose a suitable thimble; change the tool or refer if the layers are too dense.

8. Place the inside patch

Turn the jeans inside out and centre the patch behind the hole, with its right face visible through the opening and its folded edges toward you. Align the lengthwise grain with the garment. Pin or clip only the intended layers; keep the other trouser leg or pockets clear.

Steps 9–10

9. Dry-check the margins

Measure the sound-cloth overlap on all sides, not merely distance from the visible hole. Confirm the patch lies flat and will not catch in a seam or restrict motion. If the surrounding cloth is worn, enlarge the patch or refer instead of stitching there.

10. Secure the perimeter

Anchor thread on the inside and work small even running stitches or backstitches around the finished patch, a few millimetres inside its edge. Pass through both patch and garment. Remove pins before the needle approaches; avoid pulling the denim into ridges.

Steps 11–12

11. Stabilize the damaged edge

From the face, use small gentle overcast stitches through sound material just beyond the fraying edge and into the backing patch. Do not draw the hole closed. If the edge crumbles under the needle, stop and reassess the size or method.

12. Finish and inspect the reverse

Secure the working thread on the reverse without bulky knots and trim carefully. Inspect the perimeter and inner edge for loose stitches or caught layers. Remove all pins, clips and needles; check that no loose yarn or sharp part remains.

Steps 13–14

13. Observe normal movement

With the jeans off the body, bend the repaired panel gently in the direction it normally moves. A patch that buckles sharply, pulls the surrounding yarns or restricts movement needs revision. This is an ordinary handling observation, not a load test.

14. Record and care

Record the original hole, damaged zone, actual patch dimensions, grain, stitches and observations. Mark ordinary use, change or refer. Follow the more restrictive compatible care directions and recheck after normal wear; no original-strength guarantee is implied.

Fix, care and preserve

Patch feels rigid

Choose a more compatible lightweight woven patch, or refer stretch-dependent garments.

Puckers around the hole

Release tight stitches and allow the opening to remain its natural size.

Fraying spreads past patch

Stop use; assess the larger worn zone and move anchors into genuinely sound fabric.

Repair catches a pocket

Remove the interfering stitches carefully and reassess access before repeating.

Originality and evidence boundary

Original Steadleaf English prose, design, artwork, diagrams and repair records. Follow actual garment, material and tool instructions. No physical sewing, washing, durability, strength or safety testing was performed by the publisher. Adult ordinary-clothing mending only; no safety or performance certification.

Print the following pages separately if desired. Measured schematics are not full-size cutting patterns. Record only actual observations.

Pattern 1

Backing patch plan: the worked 20 x 15 mm hole sits within a 60 x 55 mm finished patch, with 20 mm overlap on each side. A 70 x 65 mm cut piece allows 5 mm turn-under per edge. Measured schematic, not a cutting template.

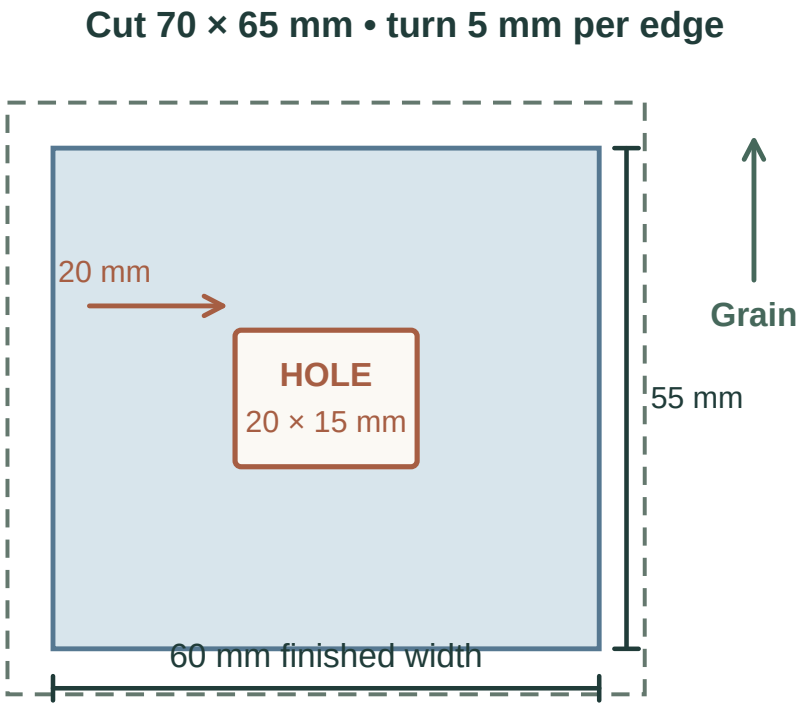

Dashed outer line: cut outline • solid: finished patch

Pattern 2

Stitch map: perimeter attachment through both layers and separate overcast stitches at the hole edge. Keep stitches anchored in sound denim. Match grain direction; do not cinch the opening. Enlarged schematic.

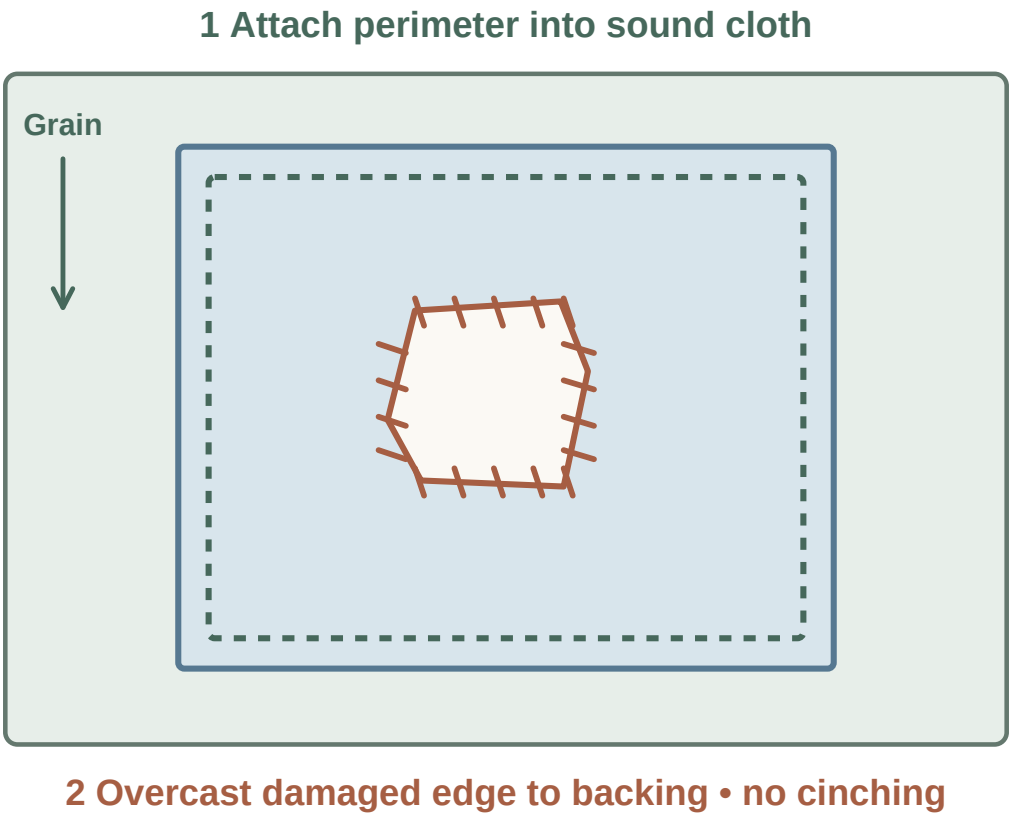

Record 1 — Materials and repair plan

Record actual observations only. Use UNKNOWN or NOT CHECKED for anything you have not established.

Garment / fibre / intended use

Visible hole and total weak zone

Patch fabric / grain / care

Finished and cut dimensions

Overlap into sound cloth

Needle / thread / scrap observation

Access / attachment method

Decision: PROCEED / CHANGE / REFER

Record 2 — Finish and follow-up

Record actual observations only. Use UNKNOWN or NOT CHECKED for anything you have not established.

Actual patch and overlap

Perimeter and edge stitch condition

Reverse anchoring / trapped layers

Puckering / movement observation

Needles and pins accounted for

Remaining damage / care restrictions

Decision: ORDINARY USE / CHANGE / REFER

Date / follow-up