Reinforce a Worn Elbow or Knee

Cut 85 × 95 mm • turn 5 mm per edge

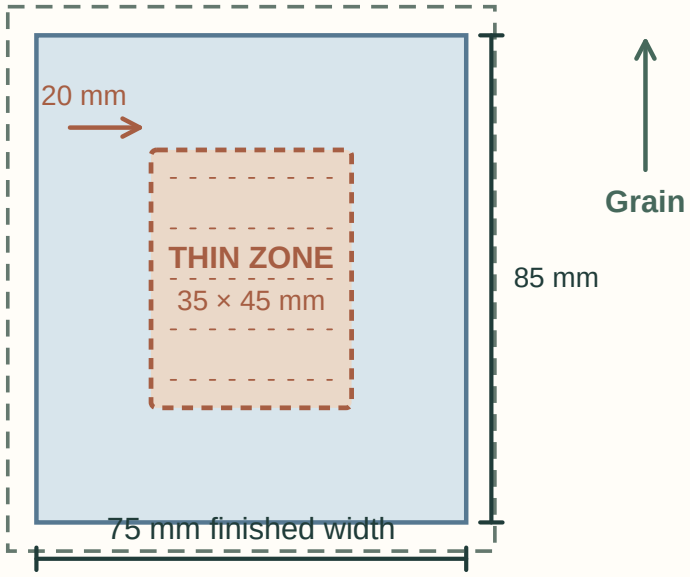

Dashed outer line: cut outline • solid: finished patch

Decide whether to add a flexible backing patch before a worn clothing panel tears.

14 practical steps • Original diagrams and repair records

Illustrative repair plans — not physical test results

Before you start

A thin elbow or knee can be reinforced before a hole appears if the surrounding garment is sound and still fits. The repair should move with the wearer rather than turn a flexible panel into a stiff hinge. This guide is for ordinary nonstretch woven adult clothing, not protective pads, workwear with safety certification, compression garments or performance clothing. If the whole joint panel is worn or movement is already restricted, refer rather than forcing a patch.

Materials

Garment, clean lightweight compatible woven reinforcement cloth, suitable hand needle and sewing thread, ruler, paper, removable marking tool, scissors, pins or clips, and comparable scrap. Choose care-compatible material; work with the garment removed. Avoid rigid fusibles or improvised protective padding. Keep sharp tools accounted for.

Plan the repair

Map a 35 x 45 mm thin zone in the example. A finished 75 x 85 mm reinforcement gives 20 mm sound-cloth margin on each side, if the whole margin is sound. Cut 85 x 95 mm for a 5 mm turned-edge allowance on all sides. Align the lengthwise grain to the garment; turn the edge to the patch reverse and place the patch inside the garment with its right side against the garment reverse. The fold is toward the inside of the garment, away from the thin panel. Anchor the perimeter in sound cloth using relaxed small stitches, not through weak yarns. Add optional sparse securing rows only where the underlying cloth remains sound enough to hold them. Check that the patch can move with the panel in ordinary gentle handling, and never claim it adds protective performance.

Steps 1–2

1. Define the garment's use

Confirm the item is everyday woven clothing, with no protective or medical role. Check whether the knee or elbow must stretch substantially. A nonstretch patch is inappropriate on an area whose fit depends on stretch.

2. Find the full wear zone

With the garment relaxed and under diffuse light, inspect the front and back of the joint panel. Compare with nearby sound material. Look for thin patches larger than the obvious worn centre; a tear needs a different repair.

Steps 3–4

3. Measure and map

Trace the approximate worn outline on paper and record its greatest width and height. Example 35 x 45 mm. Do not pull weak material taut to make measuring easier; map both the wear centre and sound surroundings.

4. Choose reinforcement or referral

Proceed only if there is an accessible sound perimeter and the joint can accommodate a supple extra layer. If an area repeatedly fails from strain, or sound margins are unavailable, consider fit alteration or professional assessment.

Steps 5–6

5. Select compatible cloth

Compare the proposed backing with the garment for weight, drape, grain and care. A slightly lighter stable patch may reduce bulk. Avoid a stiff heavy fabric simply because it seems stronger; preserve the bend of the original panel.

6. Calculate finished size

Add 20 mm at each edge of the worked worn zone, giving 75 x 85 mm. Add 5 mm per edge for the folded-edge method, giving 85 x 95 mm cut size. These example margins do not replace inspection of actual sound fabric.

Steps 7–8

7. Cut and prepare

Cut the patch on its grain, with the longer axis matching the garment's lengthwise direction in the example. Fold 5 mm toward the wrong side on all four edges. Baste or use only care-compatible pressing; keep the edges flat and corners neat.

8. Practise attachment

On comparable scraps, sew both layers together with relaxed small running stitches. Check the sample bends easily and that thread does not cut the cloth. If the needle needs force or the seam ridges, choose other materials or refer.

Steps 9–10

9. Position the patch inside

Align the patch behind the entire thin zone, right side against the garment reverse, folded edges toward you. Centre the wear outline and check that the proposed perimeter sits in sound cloth. Keep the opposite sleeve or trouser layer out of the stitching path.

10. Check joint movement before sewing

Temporarily hold the patch using clips where accessible or pins that remain in the flat supported garment. Bend the panel gently by hand, not on the body. Move or resize the patch if it catches a seam or feels rigid; remove each pin before sewing near it.

Steps 11–12

11. Attach the sound perimeter

Anchor on the inside and sew around the patch near its edge with small relaxed stitches through both layers. At each turn check the original panel stays flat. Do not attach into crumbling yarns or tighten the reinforcement to pull the worn area together.

12. Decide on intermediate stitches

If the centre needs stabilization and specific points still have sound yarns, add sparse short securing rows there. Leave the fragile centre free of punctures. If the patch cannot be supported without relying on weak yarns, stop and choose another method.

Steps 13–14

13. Inspect the reinforcement

Secure ends neatly on the reverse and remove all pins and needles. Inspect both sides for distortion, exposed thread tails and edge lifting. Gently flex along normal joint movement; a bulky or restrictive result is a reason to revise.

14. Record and monitor

Note the wear extent, patch size, cloth, attachment and movement observation. Recheck after routine wear or washing permitted by both materials. If thinning spreads or movement becomes uncomfortable, stop using the garment until reassessed.

Fix, care and preserve

Patch restricts bending

Choose a more supple compatible cloth or refer; do not stretch a rigid backing into position.

Wear reaches attachment stitches

Stop and map the wider area. A new patch must anchor in sound fabric.

Centre remains loose

Add only sparse securing stitches in sound areas if needed; never rely on fragile yarns.

Joint keeps failing

Assess the fit or repeated abrasion rather than adding layer upon layer.

Originality and evidence boundary

Original Steadleaf English prose, design, artwork, diagrams and repair records. Follow actual garment, material and tool instructions. No physical sewing, washing, durability, strength or safety testing was performed by the publisher. Adult ordinary-clothing mending only; no safety or performance certification.

Print the following pages separately if desired. Measured schematics are not full-size cutting patterns. Record only actual observations.

Pattern 1

Reinforcement decision and size map: worked 35 x 45 mm thin zone centred in a 75 x 85 mm finished patch. 20 mm example margin into sound cloth. Cut 85 x 95 mm if turning 5 mm at each edge. Schematic.

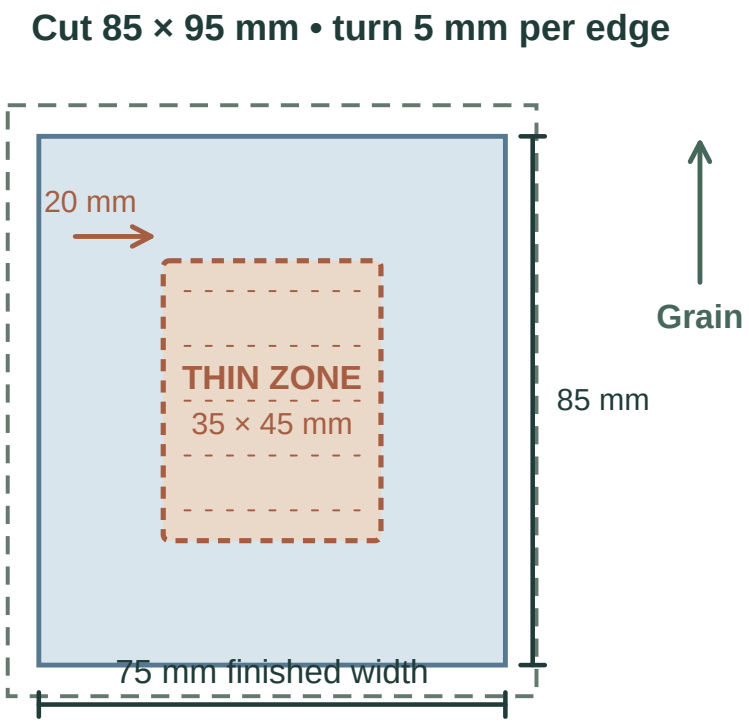

Dashed outer line: cut outline • solid: finished patch

Pattern 2

Side-view and stitch map: flexible backing sits inside the garment; perimeter stitching through sound fabric, optional short securing rows only in sound areas, no forced stitching into the weak centre. Observe bending without wearing. Schematic.

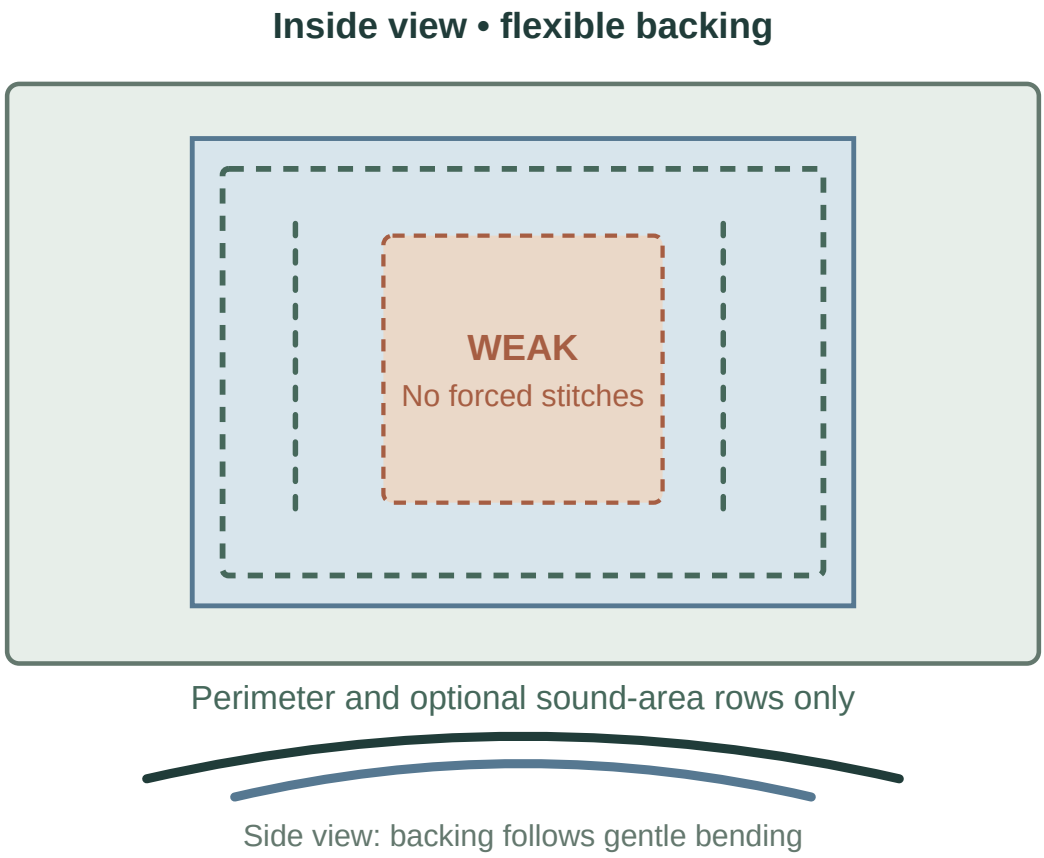

Record 1 — Materials and repair plan

Record actual observations only. Use UNKNOWN or NOT CHECKED for anything you have not established.

Garment / fabric / ordinary use

Location / greatest worn width and height

Sound margin and accessibility

Fit / joint movement concern

Patch cloth / care and grain

Cut size / finished size / edge fold

Attachment plan / scrap observation

Decision: PROCEED / CHANGE / REFER

Record 2 — Finish and follow-up

Record actual observations only. Use UNKNOWN or NOT CHECKED for anything you have not established.

Actual reinforcement dimensions

Sound perimeter stitch condition

Intermediate stitches if used

Reverse ends / tool count

Gentle bend / drape observation

Remaining weakness / follow-up

Decision: ORDINARY USE / CHANGE / REFER

Date / care limits